CyberData
The IP Endpoint Company

Installation Quick Reference

011442 Flush Mount Kit, 2x

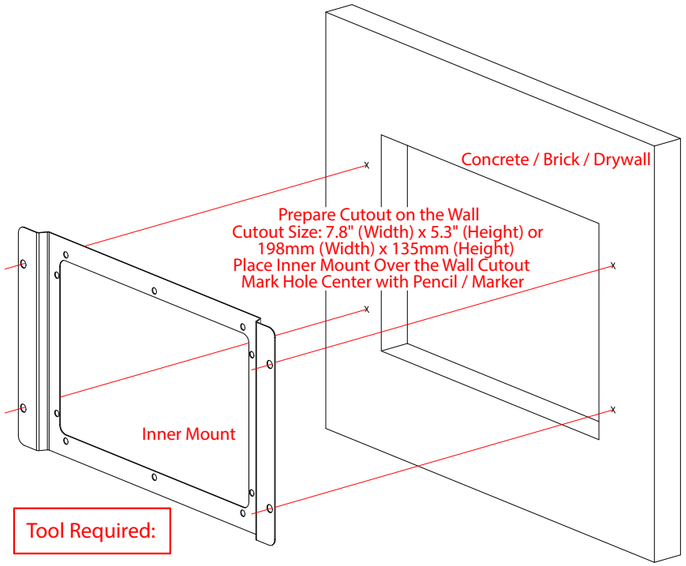

Tool Required:

1) Pencil / Marker
2) Phillip Drive Screw Driver / Power Tool with Bit
3) A Hammer / a Rubber Mallet
4) 3/16" / 4.8mm Drill Bit (Use Correct Drill Bit for Drywall / Concrete)
5) T-15 Tamper-Resistant Torx Driver (Comes with Outdoor Intercom)
6) 5/16" / 8mm Wrench / Drive Socket to Remove Gound Lug (Nut)
7) 11/32" / 9mm Wrench / Drive Socket to Remove Hole Plug Assembly (Nut)
8) Weatherproofing Silicone Sealant (Optional)

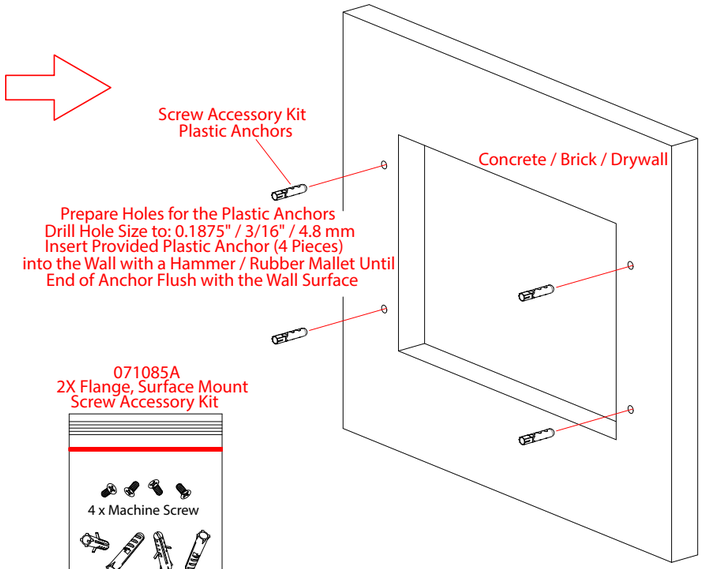

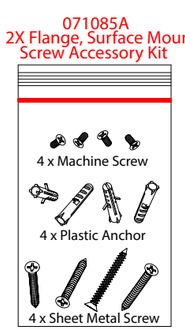

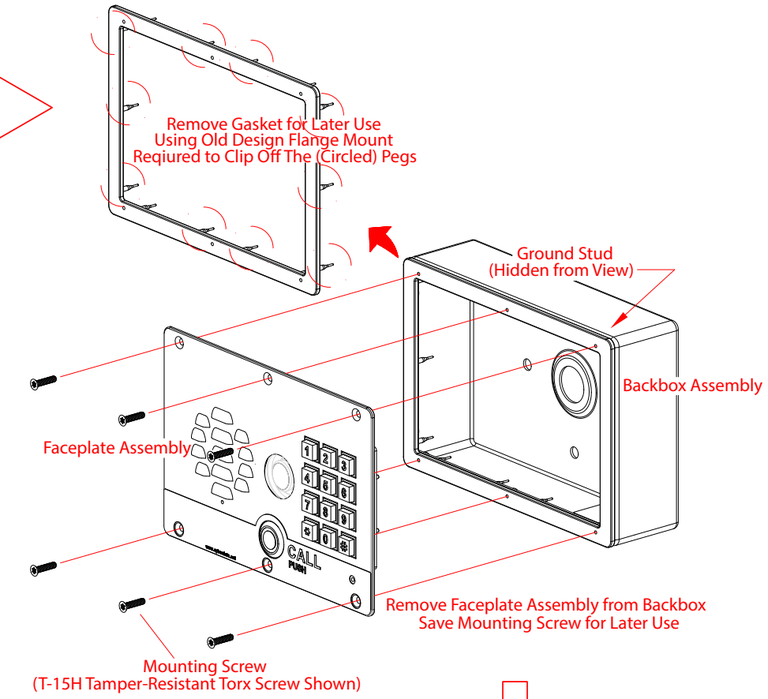

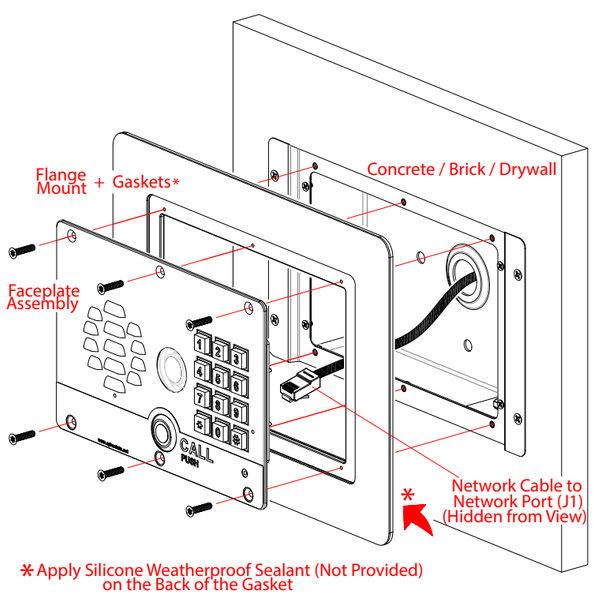

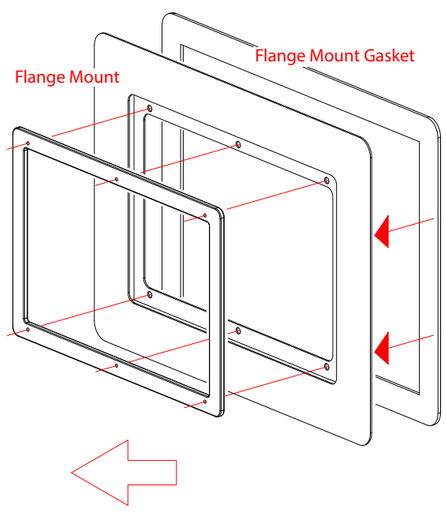

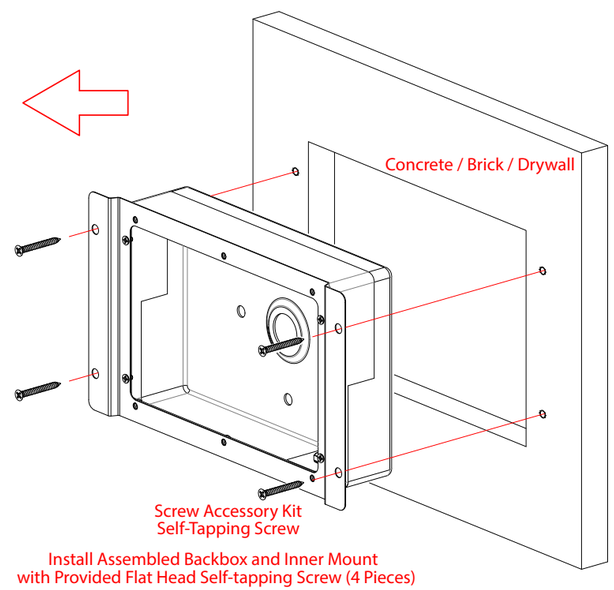

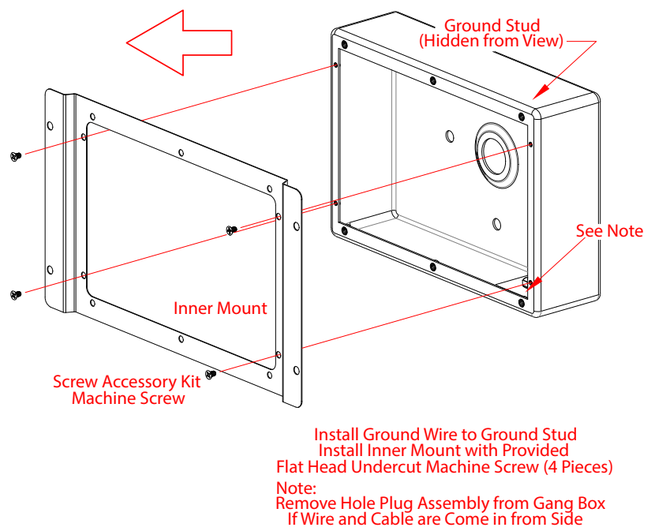

© 2024, CyberData Corporation, ALL RIGHTS RESERVED

Quick Reference 931463D © 2024, CyberData Corporation, ALL RIGHTS RESERVED