Crown 180MA/280MA/1160MA Amplifier to V2 Paging Amplifier Connections

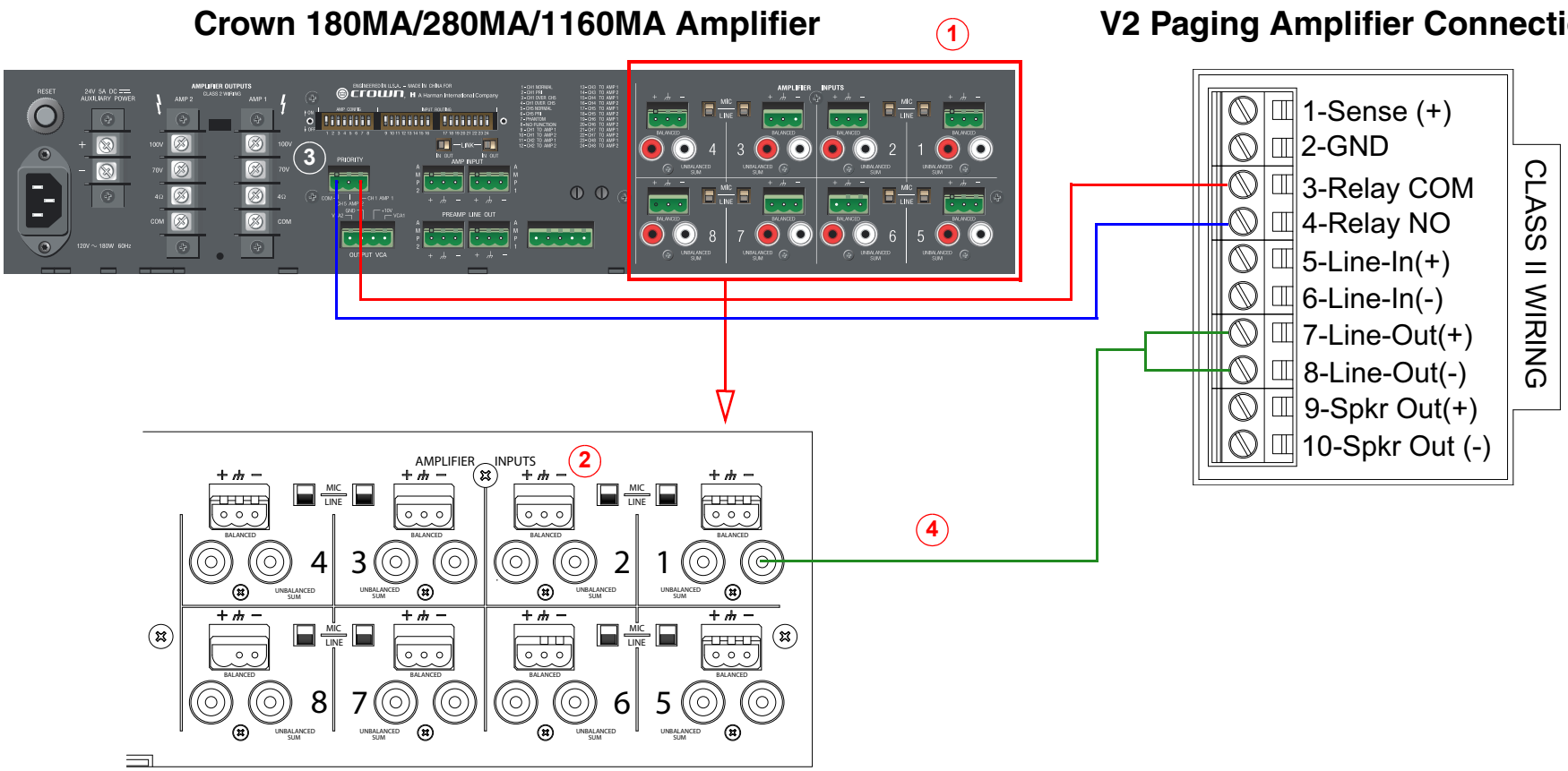

Notes

1. CyberData V2 Paging Amplifier's RCA line level output can connect to any of the eight **LINE** inputs on the Crown 180MA/280MA/1160MA amplifier.

2. Move the **MIC/LINE** switch to the **LINE** position for the respective input.

3. Connect the V2 Paging Amplifier's relay contact terminals to **COM** and **CH1 AMP1** for mute control over all other amp music channels. When using contact closure, check the box to **Activate Relay While Call Active** on the **Device Configuration** page of the web interface.

4. 2-conductor, shielded speaker wire terminated on one end with an RCA male connector is recommended.