# Bogen TBA15 to InformaCast Enabled Paging Adapter Connections

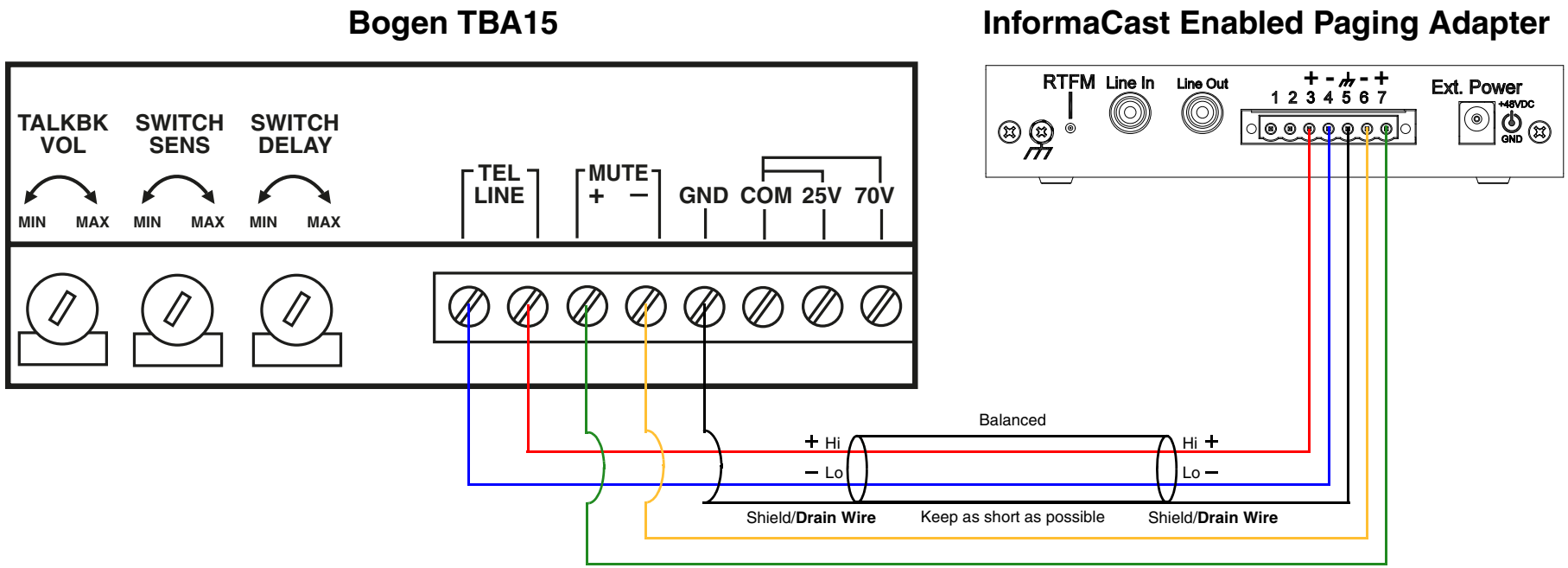


**Page Port Connections**

| Pin | Description |
|---|---|
| 1 | Fault Sense Input (Common). |
| 2 | Fault Sense Input (Sense). |
| 3 | Positive 600-Ohm Audio Output[a] |
| 4 | Negative 600-Ohm Audio Output[a] |
| 5 | Audio Ground Reference. |
| 6 | Relay Contact - Common[b] |
| 7 | Relay Contact - Normally Open[b] |

a.The 600-Ohm audio output of the page port is also suited for interfaces with lower input impedances.
b.1 Amp at 30 VDC for continuous loads.

GENERAL ALERT

**Caution**

*Equipment Hazard:* All equipment should be powered down prior to making wiring connections and changing switch positions.

**Notes:**

For mute control, enable the setting **Enable Relay on Local Audio** which is located on the **Device** tab.
2-conductor, shielded speaker wire is recommended.